Ad Vrieus,
H7ri Docket 80

D29815

ROYAL SMALL ARMS FACTORY
ENFIELD LOCK.
Date Recd 23 AUG. 1907
19/854.11
Regr No.....

CHIEF SUPERINTENDENT OF ORDNANCE FACTORIES
14 AUG. 1907

**CONFIDENTIAL.**

# SPECIFICATION No. S.A. / 306

H°7rr Dkt 80

## MINIATURE RIFLE, ~~·214~~ ·216-inch, War Office Pattern

for ·22-inch rimfire cartridges.

STANDARDS SECTION
R. D. AND D. DEPT.
R.S.A.F.
ENFIELD, MIDDX.
EN3 6JL

## Specification to govern manufacture.

*Approved*, 22*nd July*, 1907.

1. The rifles to conform to the sealed pattern, and to the dimensions shown in the drawings, R.S.A.F. 2320[A], 2321[A], 2322[A], and 2327[A], and to the conditions laid down in this Specification.

A set of these drawings can be obtained, on payment, by application to the War Office. They show alternative designs according to requirements as follows: with 5-cartridge magazine; without magazine; with long or short stock, chequered or unchequered; and alternative design of butt plate.

2. The quality of the material to be as specified; both material and workmanship to be of the best description.

3. No advantage whatever is to be taken of any omission of detail in this Specification, as a full explanation of any part of the work not fully shown or understood can be obtained from the Chief Inspector of Small Arms, Royal Small Arms Factory, Enfield Lock.

4. All supplies to be marked with the name or initials of manufacturer, place of manufacture, and date, thus, $\frac{\text{A.B.C.}}{\text{B.}}{\text{1907.}}$, on barrel immediately in rear of the backsight protector. The number of the registered design will also be marked on the barrel in front of the body, thus, R[D] 475418.

Rifles of alternative pattern will be marked by the manufacturer as follows, in a position immediately below where the view-mark will be placed:—

Rifles chambered for short ·22 Rimfire cartridge ... ·22 R.F. SHORT.
Rifles chambered for Morris Central-fire cartridge ... ·297/·230 C.F.

5. Suitable accommodation will be provided by the Contractor for carrying out the Government inspection and marking.

6. Table showing components, material, and finish:—

| Component. | Material. | Finish. |
|---|---|---|
| Body .. .. .. .. | Mild steel .. . | Browned. |
| * „ magazine pattern .. | „ „ .. .. | „ |
| Band .. .. .. .. | „ „ .. .. | Oil blacked. |
| †Band upper .. .. .. | „ „ .. .. | Blued. |
| †Band lower .. .. .. | „ „ .. .. | „ |
| Barrel .. .. .. .. | Crucible, or Siemen-Martin steel .. .. | Browned. |
| Bolt .. .. .. .. | Cast steel, crucible .. | Partially oil hardened and tempered |
| „ head .. .. .. | Mild steel .. .. | Bright. |

* These components are only required in arms fitted with magazine.
† For rifles fitted with long stock only.

(Wt. w. 1574 112 7 | 07—H & S 1656) G. 07 / 395

†† Not required for Rifles fitted with long stocks

‡ of alternative designs see Drawings R.S.A.F. 2320[A] & A.I.D. 652.

A.I.D.
482

# MINIATURE RIFLE.

## ALTERNATIVE SINGLE EXTRACTOR AND AFFECTED COMPONENTS.

FULL SIZE

### BOLT HEAD

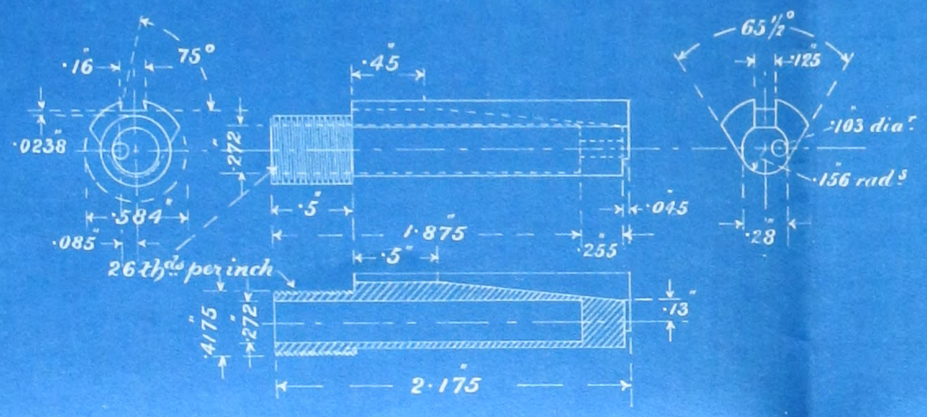


### EXTRACTOR

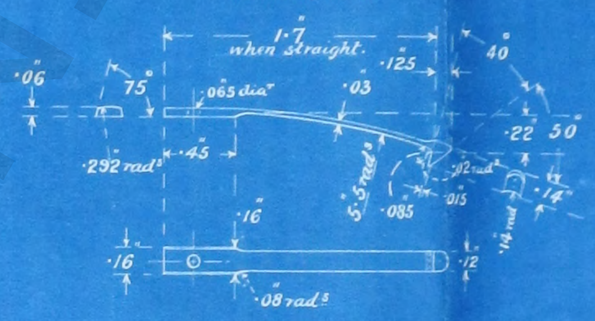


### BODY

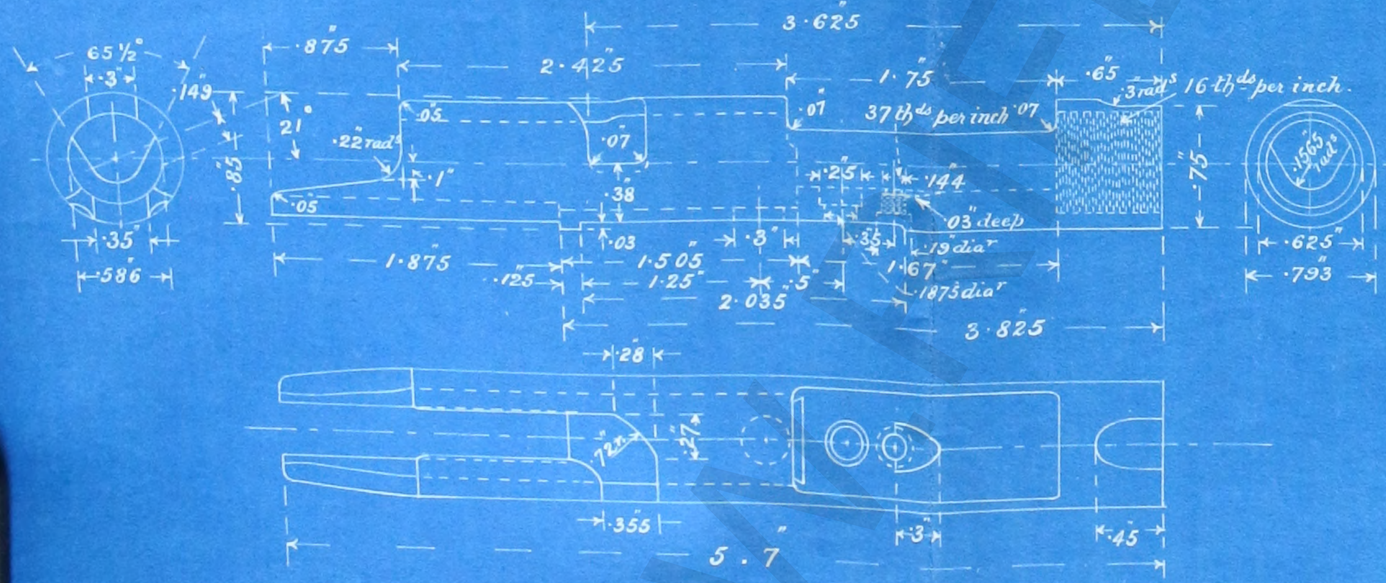


### BARREL

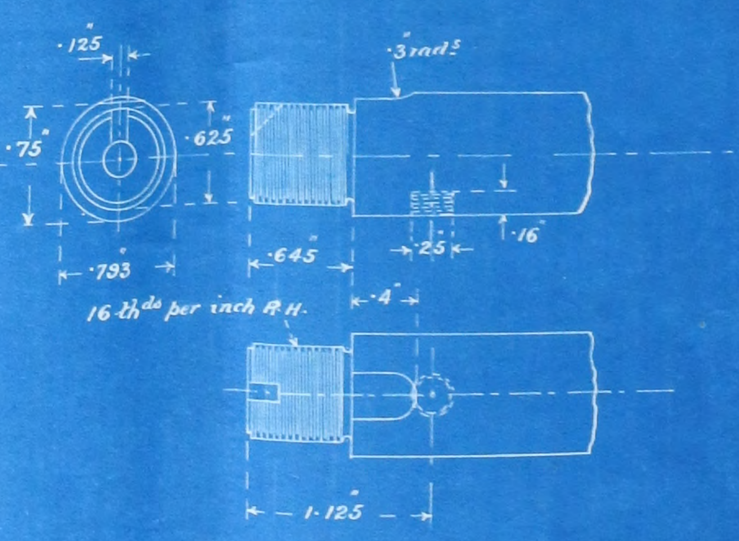


Inspector of Small Arms

Enfield Lock

WWW.VICKERYMANUALS.COM

# BUTT, PLATE.

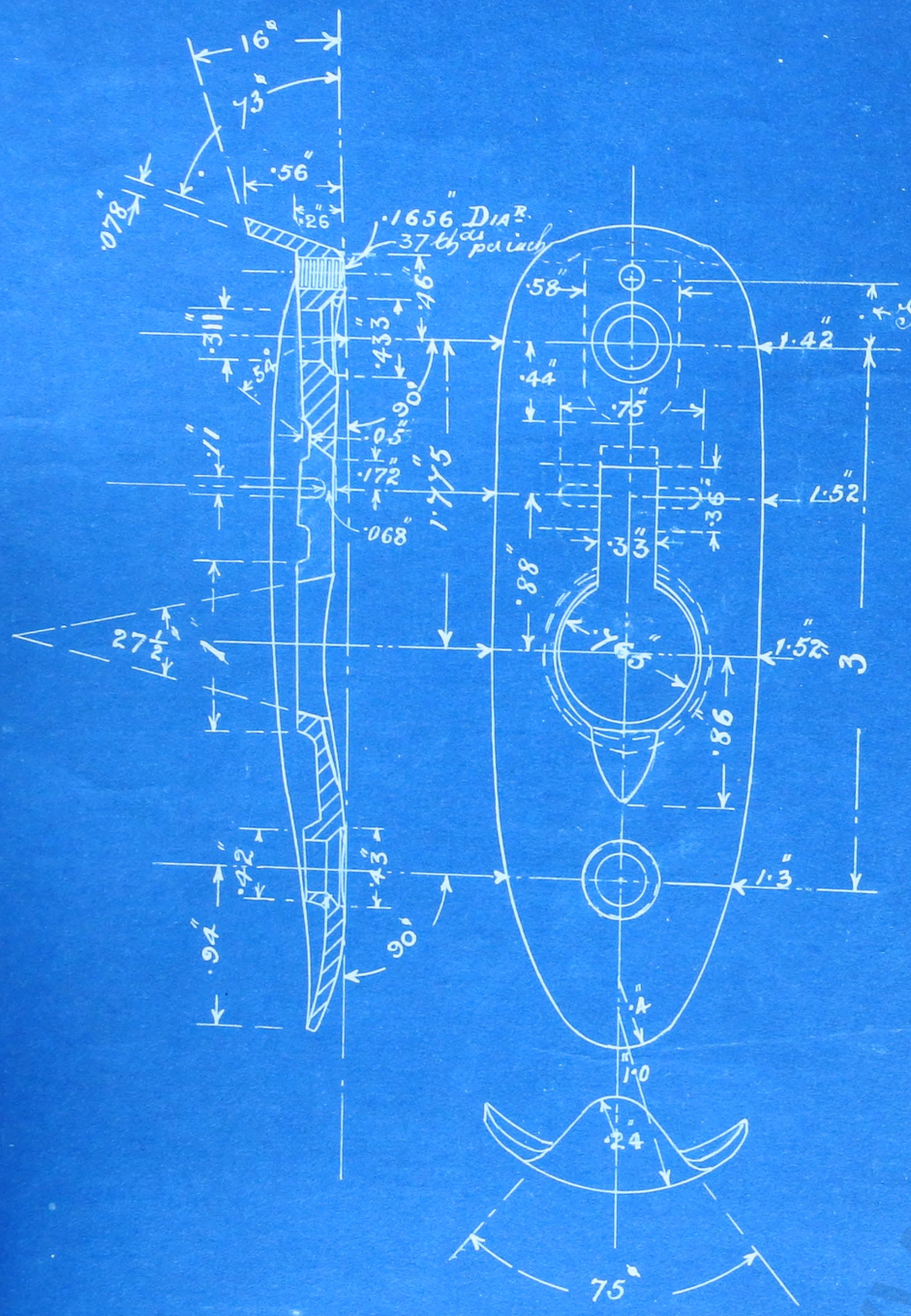


## BUTT TRAP

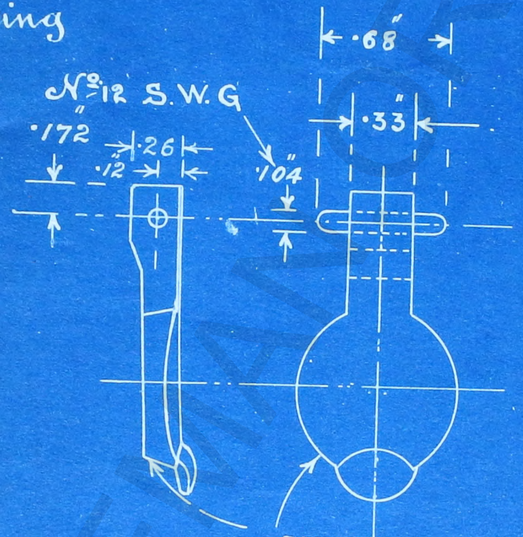


## 2 TO THIS

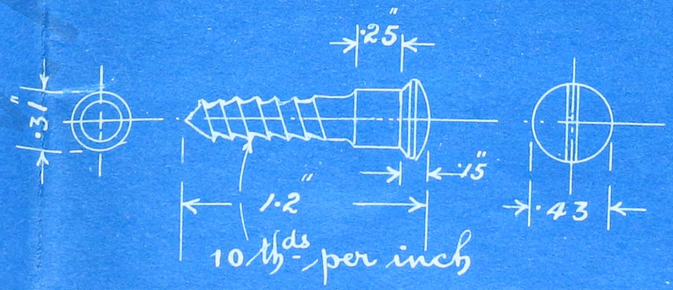


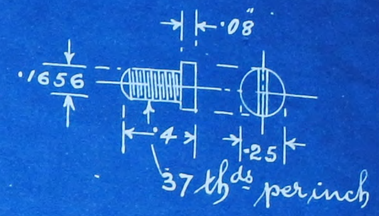


## SPRING

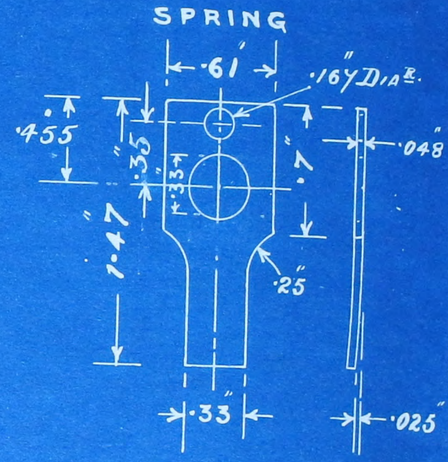


F. Clarkson

Superintendent

ROYAL SMALL ARMS FACTORY

ENFIELD LOCK.

# MINIATURE RIFLE.

R.S.A.F
2271

## ALTERNATIVE BUTT PLATE.

FULL SIZE.

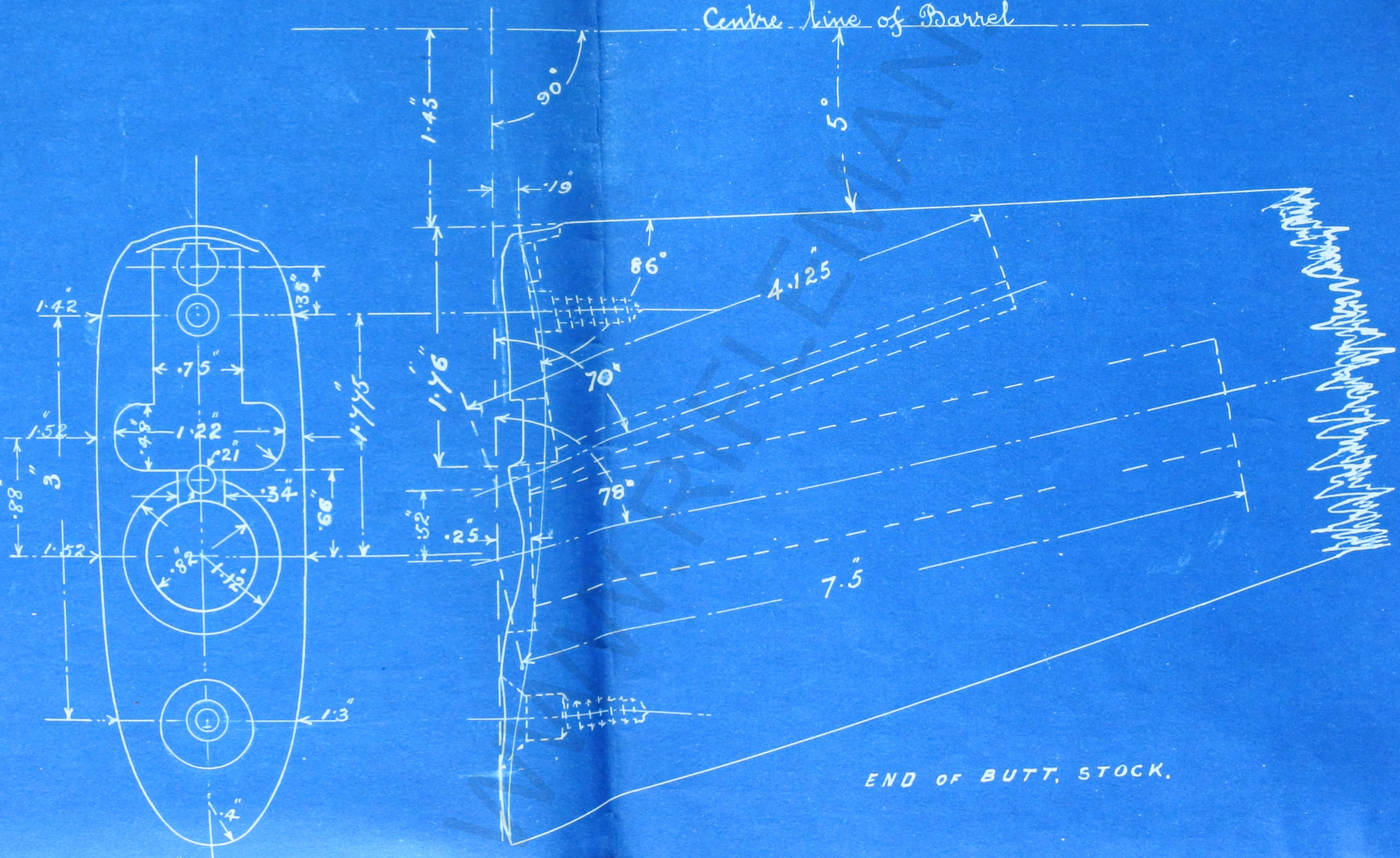

S. C.

Print herewith showing alternative Butt Plate on Miniature Rifle for C. I. S. A

[illegible]

[illegible]

17.11.06

WWW.RIFLEMAN.ORG.UK

7. *Body and Barrel.*—The body to be screwed to the barrel (or these components may be made in one piece, as preferred); backsight to be dovetailed in barrel and fixed in position by screw, spring, sight, back. The fore-sight block to be dovetailed and to be a driving fit.

The muzzle of the barrel to be "nosed."

Length of barrel from face of chamber to muzzle, 23·85 inches.

Length of sight radius, 18 inches.

The chamber and rifling to be in accordance with drawing R.S.A.F. 2320 A

The pitch of the wind-gauge screw to be 50 threads per inch; four holes to be drilled in the left head of the wind-gauge screw, as in the pattern arm, as guides for adjusting the wind-gauge allowance.

8. *Bolt.*—The bolt to be hardened and tempered at rear end, also front end of top recess; the travel of the bolt to be 1·3 inches.

The distance between the face of barrel and bolt head to be .005inch.

9. *Cocking Piece.*—To be hardened and tempered at bent.

10. *Locking Bolt Stem.*—To be hardened and tempered at cam end.

11. *Main Spring.*—To be best bright steel wire, No. 19 S.W.G. 20 coils, 2·75 inches long, hardened, tempered and blazed off. The weight of the mainspring when tested in the rifle in the fired position not to be less than 8lbs.

12. *Sear.*—To be hardened and tempered at cocking-piece end, also bolt stop, this stop to project through the body ·06 inch above bore of bolt hole.

13. *Striker.*—The point only to be hardened and tempered.

14. *Trigger.*—To be hardened and tempered at the top edge which bears on the body.

15. *Length of Rifle.*—3 feet 5½ inches.

16. *Weight of Rifle.*—Maximum, 5½ lbs. without oil bottle, pullthrough, or sling.

17. *Pull off.*—"Drag pull" weight, minimum 4 lbs., the first pull to be between 1 and 2 lbs.

## INSPECTION AND MARKING BY CHIEF INSPECTOR OF SMALL ARMS.

18. The rifles will be submitted for inspection to the Chief Inspector of Small Arms, Enfield Lock, or an officer deputed by him. They will be examined to see that they are generally in accordance with the Government pattern.

If the rifles are found correct they will be marked, according to pattern, as follows:—

| | | |
|---|---|---|
| Single loading rifles | ... | MIN. RIFLE, ♔ W.O. PATT. |
| Magazine rifles ... | ... | MIN. M.R. ♔ W.O. PATT. |

the mark being placed on the top of the barrel behind the manufacturer's mark. This mark will be regarded only as a guarantee that the rifle is generally in accordance with the Government patterns. A fee of sixpence per rifle will be charged for this inspection for all rifles other than those supplied to the War Office or Admiralty.

S. W. DOUGLAS,
*For Director of Artillery.*

WAR OFFICE.

WWW.FIREARMSUK

| | Component. | Material. | Finish. |
|---|---|---|---|
| | *Catch, magazine .. . | Cast steel .. .. | Hardened, tempered, and oil blacked. |
| ** | Cocking piece .. .. .. | ,, ,, .. .. | Partially hardened and tempered and oil blacked. |
| | Extractor .. .. .. | ,, ,, .. .. | Hardened and tempered. |
| | Guard, trigger .. .. .. | Mild steel .. .. | Oil blacked or browned. |
| * | ,, ,, magazine pattern | ,, ,, .. .. | ,, ,, |
| ** | Locking bolt, stem .. .. | Cast steel .. .. | Partially hardened. |
| | ,, ,, head .. .. | Mild steel .. .. | Oil blacked. |
| ** | *Magazine case . .. .. | ,, ,, .. .. | ,, or browned. |
| * | ,, bottom .. .. | ,, ,, .. .. | ,, ,, |
| * | ,, platform .. .. | ,, ,, .. .. | Oil blacked. |
| | Nut, screw, windgauge .. | ,, ,, .. .. | ,, |
| | Pin, axis, sight, back .. .. | ,, ,, .. .. | ,, |
| | ,, ,, sear .. .. .. | Best bright steel wire .. | Hardened, tempered and blazed off. |
| | ,, ,, trigger .. .. | ,, ,, ,, ,, .. | ,, ,, ,, ,, |
| * | ,, ,, magazine, catch .. | ,, ,, ,, ,, .. | ,, ,, ,, ,, |
| † | ,, ,, butt, trap .. .. | ,, ,, ,, ,, .. | ,, ,, ,, ,, |
| | ,, fixing, head, locking bolt.. | ,, ,, ,, ,, .. | ,, ,, ,, ,, |
| | ,, ,, washer, sight, axis | ,, ,, ,, ,, .. | Oil blacked. |
| * | ,, stop, magazine, catch .. | ,, ,, ,, ,, .. | ,, |
| | ,, fixing, nut, screw wind-gauge.. .. .. .. | ,, ,, ,, ,, .. | ,, |
| | Protector, front sight .. .. | Cast steel .. .. | Hardened, tempered and oil blacked. |
| | ,, back sight .. .. | Mild steel .. .. | Oil blacked. |
| ‡ | Plate, butt .. .. | Delta, or gunmetal .. | Polished. |
| | Spring, main .. .. .. | Best bright steel wire .. | Hardened, tempered and blazed off. |
| | ,, locking bolt .. .. | Cast steel .. .. | ,, ,, ,, ,, |
| | ,, sear .. .. .. | ,, ,, .. .. | ,, ,, ,, ,, |
| * | ,, ,, magazine pattern | ,, ,, .. .. | ,, ,, ,, ,, |
| | ,, sight, leaf .. .. | ,, ,, .. .. | ,, ,, ,, ,, |
| | ,, catch, slide .. .. | Special steel spring wire | ,, ,, ,, ,, |
| | ,, trap, butt plate .. | Cast steel .. .. | ,, ,, ,, ,, |
| * | ,, magazine .. .. | Special steel spring wire | ,, ,, ,, ,, |
| | Screw, ejector .. .. .. | Cast steel .. .. | Hardened and tempered. |
| § | ,, band, upper .. .. | Mild steel .. .. | Oil blacked. |
| § | ,, ,, lower .. .. | ,, ,, .. .. | ,, |
| †† | ,, ~~keeper~~ fixing, extractor .. | ,, ,, .. .. | ,, |
| | ,, spring, sight, back .. | ,, ,, .. .. | ,, |
| | ,, stud, barrel .. .. | ,, ,, .. .. | Bright. |
| | ,, wind-gauge .. .. | ,, ,, .. .. | Oil blacked. |
| | ,, sight protector, front sight .. .. .. | ,, ,, .. .. | ,, |
| | ,, sight protector, back sight .. .. .. | ,, ,, .. .. | ,, |
| | ,, spring, trap, butt plate | ,, ,, .. .. | ,, |
| | ,, keeper, striker.. .. | ,, ,, .. .. | ,, |
| † | ,, fixing, butt plate (2) .. | Iron .. .. .. | Case hardened. |
| | ,, guard, trigger (2) .. | ,, .. .. .. | ,, |
| | ,, fixing, barrel .. .. | Mild steel .. .. | Blued. |
| | Sight, back, bed .. .. | ,, ,, .. .. | Browned. |
| | ,, ,, leaf .. .. | ,, ,, .. .. | ,, |
| | ,, ,, wind-gauge .. | Cast steel .. .. | ,, |
| | ,, ,, slide .. .. | Mild steel .. .. | ,, |
| | ,, ,, ,, catch .. | ,, ,, .. .. | ,, |
| | ,, fore .. .. .. | ,, ,, .. .. | Hardened, tempered and oil blacked. |
| | Sear .. .. .. .. | Cast steel .. .. | Partially hardened and tempered. |
| | Striker .. .. .. .. | Mild steel .. .. | ,, ,, ,, |
| | Swivel, butt .. .. .. | ,, ,, .. .. | Blued. |
| | ,, fore-end .. .. | ,, ,, .. .. | ,, |
| †‖ | Stock .. .. .. .. | Italian walnut .. .. | |
| *†‖ | ,, magazine pattern .. | ,, ,, .. .. | |
| | Stud, barrel .. .. .. | Mild steel .. .. | Oil blacked. |
| * | ,, ,, magazine pattern.. | ,, ,, .. .. | ,, |
| | Trigger .. .. .. .. | Cast steel .. .. | Partially hardened and tempered. |
| † | Trap, butt plate .. .. | Delta, or gunmetal .. | Polished. |
| | Washer, pin, axis, sight, back.. | Mild steel .. .. | Oil blacked. |
| | ,, screw, fixing, barrel .. | ,, ,, .. .. | ,, |
| | ,, swivel, fore-end .. | ,, ,, .. .. | ,, |
| | Oil bottle .. .. .. | Brass (spoon iron) .. | Polished. |
| | Pullthrough .. .. .. | Whip cord. | |
| | ,, weight .. .. | Brass. | |
| | ,, brush .. .. | Bristles. | |

* These components are only required in arms fitted with magazine.
† Of alternative design to suit pattern of butt plate.
‡ Of alternative design.
§ For rifles fitted with long stock only.
‖ Long or short, as required.
†† The fitting of this component is optional.

†† Not required for rifles fitted with long stock.

Swivel, band/MildSteel/ Blued.

** of alternative designs - see drawings R.S.A.F.2320A & A.I.D. 652

**CONFIDENTIAL.**

D=57/24/7999
dated 21/3//10

# SPECIFICATION No. S.A./306

## MINIATURE RIFLE, ·214-inch, War Office Pattern

for ·22-inch rimfire cartridges.

### Specification to govern manufacture.

*Approved*, 22*nd July*, 1907.

A.I.D and 652.

1. The rifles to conform to the sealed pattern, and to the dimensions shown in the drawings, R.S.A.F. 2320, 2321, 2322, and 2327, and to the conditions laid down in this Specification.

A set of these drawings can be obtained, on payment, by application to the War Office. They show alternative designs according to requirements as follows: with 5-cartridge magazine; without magazine; with long or short stock, chequered or unchequered; and alternative design of butt plate.

2. The quality of the material to be as specified; both material and workmanship to be of the best description.

3. No advantage whatever is to be taken of any omission of detail in this Specification, as a full explanation of any part of the work not fully shown or understood can be obtained from the Chief Inspector of Small Arms, Royal Small Arms Factory, Enfield Lock.

4. All supplies to be marked with the name or initials of manufacturer, place of manufacture, and date, thus, $\frac{\text{A.B.C.}}{\text{B.}}{\text{1907.}}$, on barrel immediately in rear of the backsight protector. The number of the registered design will also be marked on the barrel in front of the body, thus, R$^{D}$ 475418.

Rifles of alternative pattern will be marked by the manufacturer as follows, in a position immediately below where the view-mark will be placed :—

Rifles chambered for short ·22 Rimfire cartridge ... ·22 R.F. SHORT.
Rifles chambered for Morris Central-fire cartridge ... ·297/·230 C.F.

5. Suitable accommodation will be provided by the Contractor for carrying out the Government inspection and marking.

6. Table showing components, material, and finish :—

| Component. | Material. | Finish. |
|---|---|---|
| Body .. .. .. . | Mild steel .. . | Browned. |
| * ,, magazine pattern .. | ,, ,, .. .. | ,, |
| †† Band .. .. . .. | ,, ,, .. .. | Oil blacked. |
| †Band upper .. .. .. | ,, ,, .. .. | Blued. |
| †Band lower .. .. .. | ,, ,, .. .. | ,, |
| Barrel .. .. .. . | Crucible, or Siemen-Martin steel .. .. | Browned. |
| ‡ Bolt .. .. .. .. | Cast steel, crucible .. | Partially oil hardened and tempered |
| ,, head .. .. .. | Mild steel .. .. | Bright. |

* These components are only required in arms fitted with magazine.
† For rifles fitted with long stocks only.
†† Not required for rifles fitted with long stock.

(Wt. w. 1574 112 7 | 07—H & S 1656) G. 07/395

‡ Of alternative designs see drawings R.S.A.F.2320A & A.I.D.652.

10. *Locking Bolt Stem.*—To be hardened and tempered at cam end.

11. *Main Spring.*—To be best bright steel wire, No. 19 S.W.G. 20 coils, 2·75 inches long, hardened, tempered and blazed off.

12. *Sear.*—To be hardened and tempered at cocking-piece end, also bolt stop, this stop to project through the body ·06 inch above bore of bolt hole.

13. *Striker.*—The point only to be hardened and tempered.

14. *Trigger.*—To be hardened and tempered at the top edge which bears on the body.

15.—*Length of Rifle.*—3 feet 5½ inches.

16. *Weight of Rifle.*—Maximum, 5½ lbs. without oil bottle, pullthrough, or sling.

17. *Pull off.*—"Drag pull" weight, minimum 4 lbs., the first pull to be between 1 and 2 lbs.

## INSPECTION AND MARKING BY CHIEF INSPECTOR OF SMALL ARMS.

18. The rifles will be submitted for inspection to the Chief Inspector of Small Arms, Enfield Lock, or an officer deputed by him. They will be examined to see that they are generally in accordance with the Government pattern.

If the rifles are found correct they will be marked ~~MIN. RIFLE ♔ W.O. PATT.~~, the mark being placed on the top of the barrel behind the manufacturer's mark. This mark will be regarded only as a guarantee that the rifle is generally in accordance with the Government pattern. A fee of sixpence per rifle will be charged for this inspection for all rifles other than those supplied to the War Office or Admiralty.

~~S. W. DOUGLAS,~~

*For Director of Artillery.*

WAR OFFICE.

according to pattern as follows:-
Single loading rifles MIN. RIFLE ♔ W.O. PATT
Magazine rifles MIN. M.R. ♔ W.O. PATT

| Component. | Material. | Finish. |
|---|---|---|
| †† Screws, fixing, butt plate (2) .. | Iron .. .. .. | Case hardened. |
| „ guard, trigger (2) .. | „ .. .. .. | „ |
| „ fixing, barrel .. .. | Mild steel .. .. | Blued. |
| Sight, back, bed .. .. | „ „ .. .. | Browned. |
| „ back, leaf .. .. | „ „ .. .. | „ |
| „ back, windgauge .. | Cast steel .. .. | „ |
| „ back, slide .. .. | Mild steel .. .. | „ |
| „ back, slide, catch .. | „ „ .. .. | „ |
| „ fore .. .. .. | „ „ .. .. | Hardened, tempered and oil blacked. |
| Sear .. .. .. .. | Cast steel .. .. | Partially hardened and tempered. |
| Striker .. .. .. .. | Mild steel .. .. | „ „ „ |
| Swivel, butt .. .. .. | „ „ .. .. | Blued. |
| „ fore-end .. .. | „ „ .. .. | „ |
| ** †† Stock .. .. .. .. | Italian walnut .. .. | |
| ** †† * „ magazine pattern .. | „ „ .. .. | |
| Stud, barrel .. .. .. | Mild steel .. .. | Oil blacked. |
| * „ „ magazine pattern | „ „ .. .. | „ |
| Trigger .. .. .. .. | Cast steel .. .. | Partially hardened and tempered. |
| †† Trap, butt plate .. .. | Delta, or gunmetal .. | Polished. |
| Washer, pin, axis, sight, back | Mild steel .. .. | Oil blacked. |
| „ screw, fixing, barrel | „ „ .. .. | „ |
| „ swivel, fore-end .. | „ „ .. .. | „ |
| Oil bottle .. .. .. | Brass (spoon iron) .. | Polished. |
| Pullthrough .. .. .. | Whip cord | |
| „ weight .. .. | Brass. | |
| „ brush .. .. | Bristles. | |

* These components are only required in arms fitted with magazine.

†† of alternative design to suit pattern of butt plate

** long or short, as required.

7. *Body and Barrel.*—The body to be screwed to the barrel (or these components may be made in one piece, as preferred); backsight to be dovetailed in barrel and fixed in position by screw, spring, sight, back. The fore-sight block to be dovetailed and to be a driving fit.

The muzzle of the barrel to be "nosed."

Length of barrel from face of chamber to muzzle, 23·85 inches.

Length of sight radius, 18 inches.

The chamber and rifling to be in accordance with drawing R.S.A.F. ~~2221~~ 2321.

The pitch of the wind-gauge screw to be 50 threads per inch; four holes to be drilled in the left head of the wind-gauge screw, as in the pattern arm, as guides for adjusting the wind-gauge allowance.

8. *Bolt.*—The bolt to be hardened and tempered at rear end, also front end of top recess; the travel of the bolt to be 1·3 inches.

9. *Cocking Piece.*—To be hardened and tempered at bend.

| Component. | Material. | Finish. |
|---|---|---|
| Guard, trigger .. .. .. | Mild steel .. .. | Oil blacked or browned. |
| * „ „ Magazine pattern | „ „ .. .. | „ „ |
| Locking bolt, stem .. .. | Cast steel .. .. | Partially hardened. |
| „ „ head .. .. | Mild steel .. .. | Oil blacked. |
| *Magazine case .. .. .. | „ „ .. .. | „ or browned. |
| * „ bottom .. .. | „ „ .. .. | „ „ |
| * „ platform .. .. | „ „ .. .. | Oil blacked. |
| Nut, screw, windgauge .. | „ „ .. .. | „ |
| Pin, axis, sight, back .. .. | „ „ .. .. | „ |
| „ „ sear .. .. .. | Best bright steel wire .. | Hardened, tempered and blazed off. |
| „ „ trigger .. .. | „ „ „ „ .. | „ „ „ „ |
| * „ „ magazine, catch .. | „ „ „ „ .. | „ „ „ „ |
| †† „ „ butt, trap .. .. | „ „ „ „ .. | „ „ „ „ |
| „ fixing head, locking bolt.. | „ „ „ „ .. | „ „ „ „ |
| „ „ washer, sight, axis | „ „ „ „ .. | Oil blacked. |
| * „ stop, magazine catch .. | „ „ „ „ .. | „ |
| „ fixing nut, screw windgauge .. .. .. | „ „ „ „ .. | „ |
| Protector, front sight .. .. | Cast steel .. .. | Hardened, tempered and oil blacked. |
| „ back sight .. .. | Mild steel .. .. | Oil blacked. |
| § Plate, butt .. .. .. | Delta, or gunmetal .. | Polished. |
| Spring, main .. .. .. | Best bright steel wire .. | Hardened, tempered and blazed off. |
| „ locking bolt .. .. | Cast steel .. .. | „ „ „ „ |
| „ sear .. .. .. | „ „ .. .. | „ „ „ „ |
| * „ „ magazine pattern | „ „ .. .. | „ „ „ „ |
| „ sight, leaf .. .. | Cast steel .. .. | „ „ „ „ |
| „ catch, slide .. .. | Special steel spring wire | „ „ „ „ |
| „ trap, butt plate .. | Cast steel .. .. | „ „ „ „ |
| * „ magazine .. .. | Special steel spring wire | „ „ „ „ |
| Screws, ejector .. .. | Cast steel .. .. | Hardened and tempered. |
| „ spring, sight, back .. | Mild steel .. .. | Oil blacked. |
| „ stud, barrel .. .. | „ „ .. .. | Bright. |
| „ windgauge .. .. | „ „ .. .. | Oil blacked |
| „ sight protector, front sight .. .. | „ „ .. .. | „ |
| „ sight protector, back sight .. .. | „ „ .. .. | „ |
| „ spring, trap, butt plate | „ „ .. .. | „ |
| „ keeper, striker .. | „ „ .. .. | „ |

* These components are only required in arms fitted with magazine.

† Screws, band, upper | Mild steel | Oil blacked

† Screws, band, lower | Mild steel | Oil blacked

† ‡ or rifles fitted with long stock only.

†† Of alternative design, to suit pattern of butt-plate

§ Of alternative design.

WWW.RG.UK
RIFLEMAN

CONFIDENTIAL

Record

Ex 10A 10.

# SPECIFICATION No. S.A. ~~295.~~ 306

## MINIATURE RIFLE, ·214-inch, War Office Pattern | for ·22-inch rimfire cartridges.

### Specification to govern manufacture.

~~77~~
~~15~~
~~4107~~
~~27.8.06~~

*Approved ~~23rd July, 1906.~~*

1. The rifles to conform to the sealed pattern, and to the dimensions shown in the drawings, R.S.A.F. ~~2220, 2221~~ and ~~2222~~, and to the conditions laid down in this Specification. 2320, 2321, 2322 and 2327

A set of these drawings can be obtained, on payment, by application to the War Office. They show alternative designs according to requirements as follows; with 5 ~~or 4~~-cartridge magazine; without magazine; with long or short stock, chequered and unchequered; and alternative design of butt-plate.

2. The quality of the material to be as specified, both material and workmanship to be of the best description.

3. No advantage whatever is to be taken of any omission of detail in this Specification, as a full explanation of any part of the work not fully shown or understood can be obtained from the Chief Inspector of Small Arms, Royal Small Arms Factory, Enfield Lock.

4. All supplies to be marked with the name or initials of manufacturer, place of manufacture, and date, thus, $\frac{\text{A.B.C.}}{\text{B.}}$, $\frac{}{1906.}$ on barrel immediately in rear of the backsight protector. The number of the registered design will also be marked on the barrel in front of the body, thus:- R.D. 475418

Rifles of alternative pattern will be marked by the manufacturer as follows in a position immediately below where the view-mark will be placed..

~~Rifles with long stocks . . . . LONG STOCK~~ 6/1/24/6898

Rifle chambered for short ·22 Rimfire cartridge . . . . . ·22 R.F. SHORT

" " " Morris central-fire cartridge . . . . ·297/·230 C.F.

| | | |
|---|---|---|
| †Band upper<br>" lower | Mild steel<br>" " | Oil blacked.<br>Blued<br>" |
| Barrel .. .. .. .. | Crucible, or Siemen-Martin steel .. .. | Browned. |
| Bolt .. .. .. .. | Cast steel, crucible .. | Partially oil hardened and tempered. |
| „ head .. .. .. | Mild steel .. .. | Bright. |
| *Catch, magazine .. .. | Cast steel .. .. | Hardened, tempered and oil blacked. |
| Cocking piece .. .. .. | „ „ .. .. | Partially hardened and tempered and oil blacked. |
| Extractor .. .. .. | „ „ .. .. | Hardened and tempered. |

* These components are only required in arms fitted with magazine.

† For rifles fitted with long stock only

(Wt. w. 1833 200 7 | 06—H & S 8985) G 06/297.

WWW.NRFL.ORG.UK

CONFIDENTIAL

Spec^n. S.A./306

Advanced to

A – Overhanging body to retain bolthead in line with bolt, & ectractor covered in – cover of ectractor cut away to clear overhang of body

(Note – In this case the drawings were brought up to date without being advanced in number & as there was no alteration to letterpress there is nothing to indicate why the Spec^n. is advanced to A).

B – Lee C.E./9838 dy 3.4.08

C – Lee C.E./641 dy 31.3.09

D. Lee C.E./1435 dy 10.3.10

Record CE 3/3/09 104

**CONFIDENTIAL.**

27 A3
964. 1560
Enclosure to 77/15/4162.

Rifles, miniature, with lengthened fore-end are not to be marked "Rd. 475418" (the registered design No.) as they do not comply with the Registered design.

27 77/15/
1002 4305.

Rifles, miniature, with long fore-ends for Natal to be marked "Min. Rifle ♔ W.O. (Natal Patt.)."

27 57/8/
1174 4665.

2. The quality of the material to be as specified; both material and workmanship to be of the best description.

In cases of doubt as to the suitability of any of the material for the purpose intended, early reference is to be made to the Chief Inspector, in order to avoid the delay caused by the rejection of such material after delivery.

4. All supplies to be marked with the name or initials of manufacturer, place of manufacture, and date, thus, $\frac{\text{A.B.C.}}{\text{B.}}{\text{1907.}}$, on barrel immediately in rear of the backsight protector. The number of the registered design will also be marked on the barrel in front of the body, thus, R$^{D}$ 475418.

Rifles of alternative pattern will be marked by the manufacturer as follows, in a position immediately below where the view-mark will be placed :—

Rifles chambered for short ·22 Rimfire cartridge ... ·22 R.F. SHORT.
Rifles chambered for Morris Central-fire cartridge ... ·297/·230 C.F.

5. Suitable accommodation will be provided by the Contractor for carrying out the Government inspection and marking.

6. Table showing components, material, and finish :—

| Component. | Material. | Finish. |
|---|---|---|
| Body .. .. .. .. | Mild steel .. . | Browned. |
| ,, magazine pattern .. | ,, ,, .. .. | ,, |
| *and .. .. .. .. | ,, ,, .. .. | Oil blacked. |
| *and upper .. .. .. | ,, ,, .. .. | Blued. |
| *and lower .. .. .. | ,, ,, .. .. | ,, |
| Barrel .. .. .. .. | Crucible, or Siemen-Martin steel .. .. | Browned. |
| ‡ Bolt .. .. .. .. | Cast steel, crucible .. | Partially oil hardened and tempered |
| ,, head .. .. .. | Mild steel .. .. | Bright. |

* These components are only required in arms fitted with magazine.
† For rifles fitted with long stock only.
†† Not required for rifles fitted with long stock
‡ Of alternative designs see dra[illegible]

(Wt. w. 1574 112 7 | 07—H & S 1656) G. 07 / 395

CONFIDENTIAL

10

Record CR 31/3/09

Spec^n. L.A./306

Advanced to

A – Overhanging body to retain bolthead in line with bolt, & extractor covered in – cover of extractor cut away to clear overhang of body

(Note – In this case the drawings were brought up to date without being advanced in number & as there was no alteration to letterpress there is nothing to indicate why the Spec^n is advanced to A).

B – See CR/9838 dy 3.4.08

C – See CR/641 dy 31.3.09

D. See CR/1435 dy 10.3.10

with lengthened fore-end are r
418" (the registered design No.
th the Registered design.

e, with long fore-ends for Natal
fle W.O. (Natal Patt.)."

be as specified; both material and

of any of the material for the
e to the Chief Inspector, in order
to avoid the delay caused by the jection of such material after delivery.

place of manufacture, and date, thus, A.B.C. / B. / 1907., on barrel immediately in rear of the backsight protector. The number of the registered design will also be marked on the barrel in front of the body, thus, R^D 475418.

Rifles of alternative pattern will be marked by the manufacturer as follows, in a position immediately below where the view-mark will be placed :—

Rifles chambered for short ·22 Rimfire cartridge ... ·22 R.F. SHORT.
Rifles chambered for Morris Central-fire cartridge ... ·297/·230 C.F.

5. Suitable accommodation will be provided by the Contractor for carrying out the Government inspection and marking.

6. Table showing components, material, and finish :—

| Component. | Material. | Finish. |
|---|---|---|
| Body .. .. .. .. | Mild steel .. . | Browned. |
| „ magazine pattern .. | „ „ .. .. | „ |
| *and .. .. .. .. | „ „ .. .. | Oil blacked. |
| and upper .. .. .. | „ „ .. .. | Blued. |
| and lower .. .. .. | „ „ .. .. | „ |
| arrel .. .. .. .. | Crucible, or Siemen-Martin steel .. .. | Browned. |
| ‡ Bolt .. .. .. .. | Cast steel, crucible .. | Partially oil hardened and tempered |
| „ head .. .. .. | Mild steel .. .. | Bright. |

* These components are only required in arms fitted with magazine.
† For rifles fitted with long stock only.
†† Not required for rifles fitted with long stock

(Wt. w. 1574 112 7 | 07—H & S 1656) G. 07 / 395

‡ Of alternative designs see dra

WWW.PRIVATEARMSGUIDE.COM

7. *Body and Barrel.*—The body to be screwed to the barrel (or these components may be made in one piece, as preferred); backsight to be dovetailed in barrel and fixed in position by screw, spring, sight, back. The fore-sight block to be dovetailed and to be a driving fit.

The muzzle of the barrel to be "nosed."

Length of barrel from face of chamber to muzzle, 23·85 inches.

Length of sight radius, 18 inches.

The chamber and rifling to be in accordance with drawing R.S.A.F. 2320. A "C"

The pitch of the wind-gauge screw to be 50 threads per inch; four holes to be drilled in the left head of the wind-gauge screw, as in the pattern arm, as guides for adjusting the wind-gauge allowance.

8. *Bolt.*—The bolt to be hardened and tempered at rear end, also front end of top recess; the travel of the bolt to be 1·3 inches.

The distance between face of barrel and bolt-head to be within ·005 inch "C"

9. *Cocking Piece.*—To be hardened and tempered at bent.

10. *Locking Bolt Stem.*—To be hardened and tempered at cam end.

11. *Main Spring.*—To be best bright steel wire, No. 19 S.W.G. 20 coils, 2·75 inches long, hardened, tempered and blazed off. The weight of the main-spring when tested in rifle in the fired position to be not less than 8 lbs. "C"

12. *Sear.*—To be hardened and tempered at cocking-piece end, also bolt stop, this stop to project through the body ·06 inch above bore of bolt hole.

13. *Striker.*—The point only to be hardened and tempered.

14. *Trigger.*—To be hardened and tempered at the top edge which bears on the body.

15. *Length of Rifle.*—3 feet 5½ inches.

16. *Weight of Rifle.*—Maximum, 5½ lbs. without oil bottle, pullthrough, or sling.

17. *Pull off.*—"Drag pull" weight, minimum 4 lbs., the first pull to be between 1 and 2 lbs.

## INSPECTION AND MARKING BY CHIEF INSPECTOR OF SMALL ARMS.

18. The rifles will be submitted for inspection to the Chief Inspector of Small Arms, Enfield Lock, or an officer deputed by him. They will be examined to see that they are generally in accordance with the Government pattern.

If the rifles are found correct they will be marked, according to pattern, as follows:—

| | | |
|---|---|---|
| Single loading rifles | ... | MIN. RIFLE, ♔ W.O. PATT. |
| Magazine rifles ... | ... | MIN. M.R. ♔ W.O. PATT. |

the mark being placed on the top of the barrel behind the manufacturer's mark. This mark will be regarded only as a guarantee that the rifle is generally in accordance with the Government patterns. A fee of sixpence per rifle will be charged for this inspection for all rifles other than those supplied to the War Office or Admiralty.

S. W. DOUGLAS,
*For Director of Artillery.*

WAR OFFICE.

| Component. | Material. | Finish. |
|---|---|---|
| *Catch, magazine .. . | Cast steel .. .. | Hardened, tempered, and oil blacked. |
| "D" ** Cocking piece .. .. .. | ,, ,, .. .. | Partially hardened and tempered and oil blacked. |
| Extractor .. .. .. | ,, ,, .. .. | Hardened and tempered. |
| Guard, trigger .. .. .. | Mild steel .. .. | Oil blacked or browned. |
| * ,, ,, magazine pattern | ,, ,, .. .. | ,, ,, |
| "D" ** Locking bolt, stem .. .. | Cast steel .. .. | Partially hardened. |
| "D" ** ,, ,, head .. .. | Mild steel .. .. | Oil blacked. |
| *Magazine case . .. .. | ,, ,, .. .. | ,, or browned. |
| * ,, bottom .. .. | ,, ,, .. .. | ,, ,, |
| * ,, platform .. .. | ,, ,, .. .. | Oil blacked. |
| Nut, screw, windgauge .. | ,, ,, .. .. | ,, |
| Pin, axis, sight, back .. .. | ,, ,, .. .. | ,, |
| ,, ,, sear .. .. .. | Best bright steel wire .. | Hardened, tempered and blazed off. |
| ,, ,, trigger .. .. | ,, ,, ,, ,, .. | ,, ,, ,, ,, |
| * ,, ,, magazine, catch .. | ,, ,, ,, ,, .. | ,, ,, ,, ,, |
| † ,, ,, butt, trap .. .. | ,, ,, ,, ,, .. | ,, ,, ,, ,, |
| ,, fixing, head, locking bolt.. | ,, ,, ,, ,, .. | ,, ,, ,, ,, |
| ,, ,, washer, sight, axis | ,, ,, ,, ,, .. | Oil blacked. |
| * ,, stop, magazine, catch .. | ,, ,, ,, ,, .. | ,, |
| ,, fixing, nut, screw windgauge.. .. .. .. | ,, ,, ,, ,, .. | ,, |
| Protector, front sight .. .. | Cast steel .. .. | Hardened, tempered and oil blacked. |
| ,, back sight .. .. | Mild steel .. .. | Oil blacked. |
| ‡Plate, butt .. .. | Delta, or gunmetal .. | Polished. |
| Spring, main .. .. .. | Best bright steel wire .. | Hardened, tempered and blazed off. |
| ,, locking bolt .. .. | Cast steel .. .. | ,, ,, ,, ,, |
| ,, sear .. .. .. | ,, ,, .. .. | ,, ,, ,, ,, |
| * ,, ,, magazine pattern | ,, ,, .. .. | ,, ,, ,, ,, |
| ,, sight, leaf .. .. | ,, ,, .. .. | ,, ,, ,, ,, |
| ,, catch, slide .. .. | Special steel spring wire | ,, ,, ,, ,, |
| ,, trap, butt plate .. | Cast steel .. .. | ,, ,, ,, ,, |
| * ,, magazine .. .. | Special steel spring wire | ,, ,, ,, ,, |
| Screw, ejector .. .. .. | Cast steel .. .. | Hardened and tempered. |
| § ,, band, upper .. .. | Mild steel .. .. | Oil blacked. |
| § ,, lower .. .. | ,, ,, .. .. | ,, |
| †† ,, ~~keeper~~ Fixing, extractor .. | ,, ,, .. .. | ,, |
| ,, spring, sight, back .. | ,, ,, .. .. | ,, |
| ,, stud, barrel .. .. | ,, ,, .. .. | Bright. |
| ,, wind-gauge .. .. | ,, ,, .. .. | Oil blacked. |
| ,, sight protector, front sight . .. .. | ,, ,, .. .. | ,, |
| ,, sight protector, back sight .. .. .. | ,, ,, .. .. | ,, |
| ,, spring, trap, butt plate | ,, ,, .. .. | ,, |
| ,, keeper, striker.. .. | ,, ,, .. .. | ,, |
| † ,, fixing, butt plate (2) .. | Iron .. .. .. | Case hardened. |
| ,, guard, trigger (2) .. | ,, .. .. .. | ,, |
| ,, fixing, barrel .. .. | Mild steel .. .. | Blued. |
| Sight, back, bed .. .. | ,, ,, .. .. | Browned. |
| ,, ,, leaf .. .. | ,, ,, .. .. | ,, |
| ,, ,, wind-gauge .. | Cast steel .. .. | ,, |
| ,, ,, slide .. .. | Mild steel .. .. | ,, |
| ,, ,, ,, catch .. | ,, ,, .. .. | ,, |
| ,, fore .. .. .. | ,, ,, .. .. | Hardened, tempered and oil blacked. |
| Sear .. .. .. .. | Cast steel .. .. | Partially hardened and tempered. |
| Striker .. .. .. .. | Mild steel .. .. | ,, ,, ,, |
| Swivel, butt .. .. .. | ,, ,, .. .. | Blued. |
| ,, fore-end .. .. | ,, ,, .. .. | ,, |
| †‖Stock . .. .. .. | Italian walnut .. .. | |
| *†‖ ,, magazine pattern .. | ,, ,, .. .. | |
| Stud, barrel .. .. .. | Mild steel .. .. | Oil blacked. |
| * ,, ,, magazine pattern.. | ,, ,, .. .. | ,, |
| Trigger .. .. .. .. | Cast steel .. .. | Partially hardened and tempered. |
| †Trap, butt plate .. .. | Delta, or gunmetal .. | Polished. |
| Washer, pin, axis, sight, back.. | Mild steel .. .. | Oil blacked. |
| ,, screw, fixing, barrel .. | ,, ,, .. .. | ,, |
| ,, swivel, fore-end .. | ,, ,, .. .. | ,, |
| Oil bottle .. .. .. | Brass (spoon iron) .. | Polished. |
| Pullthrough .. .. .. | Whip cord. | |
| ,, weight .. .. | Brass. | |
| ,, brush .. .. | Bristles. | |

* These components are only required in arms fitted with magazine.
† Of alternative design to suit pattern of butt plate.
‡ Of alternative design.
§ For rifles fitted with long stock only.
‖ Long or short, as required.
~~†† The fitting of this component is optional.~~

†† Not required for rifles fitted with long stock.

"C" Swivel, band | mild steel | Blued.

** of alternative designs - see drawings R.S.a.I 2320[A] & A.I.D. 652.